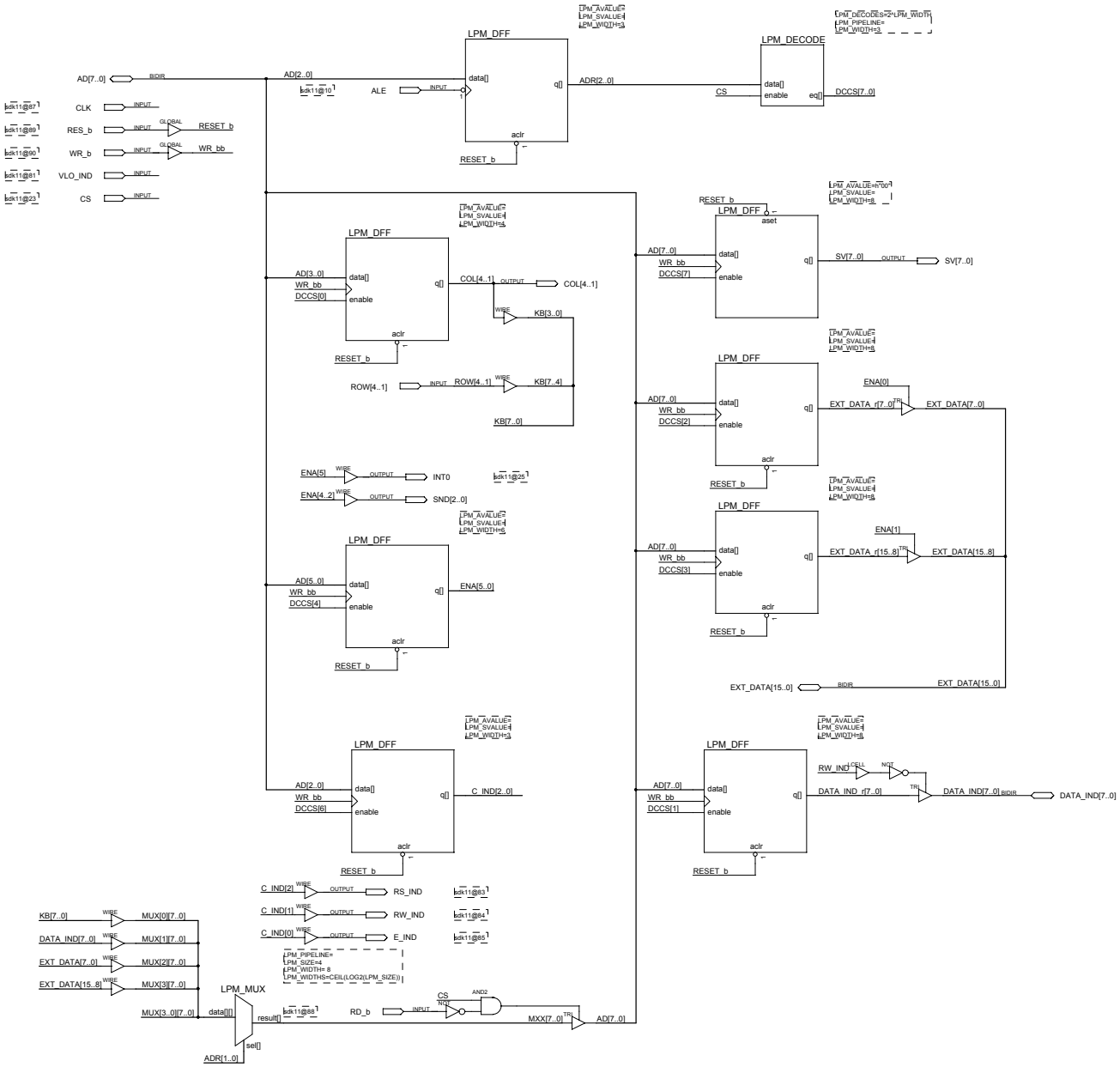

TITLE	SDK 1.1 (Extender Logic Scheme)
COMPANY	LMT Ltd.
DESIGNER	Aleksey Chistyakov
SIZE EV	NUMBER 1.1 REV A
DATE 12:45p 7-03-2001	SHEET 1 OF 1